INFECTION AND IMMUNITY, Jan. 2011, p. 369–379 Vol. 79, No. 1
0019-9567/11/$12.00 doi:10.1128/IAI.00330-10
Copyright © 2011, American Society for Microbiology. All Rights Reserved.

Investigation of the Mechanisms by Which *Listeria monocytogenes* Grows in Porcine Gallbladder Bile▽†

Georgina C. Dowd,[1,2] Susan A. Joyce,[1,2] Colin Hill,[1,2] and Cormac G. M. Gahan[1,2,3]*

Alimentary Pharmabiotic Centre, University College Cork, Cork, Ireland[1]; Department of Microbiology, University College Cork, Cork, Ireland[2]; and School of Pharmacy, University College Cork, Cork, Ireland[3]

Received 1 April 2010/Returned for modification 29 April 2010/Accepted 1 October 2010

The food-borne pathogen *Listeria monocytogenes* is known to colonize the lumen of the gallbladder in infected mice and to grow rapidly in this environment (J. Hardy et al., Science 303:851–853, 2004). However, relatively little is known about the mechanisms utilized by the pathogen to survive and grow in this location. We utilized gallbladder bile (GB bile) isolated directly from porcine gallbladders as an *ex vivo* model of gallbladder growth. We demonstrate that GB bile is generally nontoxic for bacteria and can readily support growth of a variety of bacterial species including *L. monocytogenes*, *Lactococcus lactis*, *Salmonella enterica* serovar Typhimurium, and *Escherichia coli*. Significantly, *L. monocytogenes* grew at the same rate as the nonpathogenic species *Listeria innocua*, indicating that the pathogen does not possess specialized mechanisms that enable growth in this environment. However, when we reduced the pH of GB bile to pH 5.5 in order to mimic the release of bile within the small intestine, the toxicity of GB bile increased significantly and specific resistance mechanisms (Sigma B, BSH, and BilE) were essential for survival of the pathogen under these conditions. In order to identify genetic loci that are necessary for growth of *L. monocytogenes* in the gallbladder, a mariner transposon bank was created and screened for mutants unable to replicate in GB bile. This led to the identification of mutants in six loci, including genes encoding enzymes involved in purine metabolism, amino acid biosynthesis, and biotin uptake. Although GB bile does not represent a significant impediment to bacterial growth, specific metabolic processes are required by *L. monocytogenes* in order to grow in this environment.

Listeria monocytogenes is a Gram-positive food-borne pathogen that accounts for 38% of all mortalities associated with food-borne bacterial infections in the United States (31) and is responsible for the majority of food recalls due to bacterial contamination (50). The pathogen is the causative agent of listeriosis, a disease which presents with a range of symptoms predominantly within the young, old, pregnant, and immunocompromised. In at-risk patients, the pathogen can cause systemic infection leading to meningitis or encephalitis. In the case of pregnant women, "early-onset" listeriosis can result in abortion, stillbirth, or premature delivery of the fetus, whereas "late-onset" listeriosis can lead to neonatal meningitis (13, 41). A recent increase in the incidence of listeriosis has been reported in numerous countries, confirming listeriosis as a significant public health concern (2, 8, 17, 25).

L. monocytogenes is an extremely robust pathogen with the capability to survive under many suboptimal conditions. The bacterium can adapt to a saprophytic lifestyle in external environments; is capable of growth and survival during the processing, distribution, and preparation of food; and is also a successful colonizer of mammalian hosts (15, 43). *L. monocytogenes* has a diverse molecular arsenal for coping with stresses encountered during adaptation to suboptimal environments, including the specific microenvironments found within the mammalian host gastrointestinal (GI) tract. These include systems required for acid adaptation (potentially important for gastric transit), osmotolerance (the OpuC system), and resistance to bile in the small intestine (6, 11, 14, 43–45, 49).

Bile represents a particularly relevant impediment to bacterial growth in mammalian hosts since it is specific to the GI tract and is not encountered elsewhere in nature. The main components of bile include various bile acids, cholesterol, phospholipids, and the pigment biliverdin. The primary bile acids, cholic acid and chenodeoxycholic acid, are synthesized from cholesterol in hepatocytes and prior to their secretion from the liver they are conjugated to either glycine (glycoconjugated) or taurine (tauroconjugated) (4, 23, 33). Interdigestively, bile is stored in the gallbladder and is concentrated 5- to 10-fold by the removal of water and electrolytes. On consumption of food, the gallbladder is stimulated to contract due to the production of cholecystokinin, and bile is expelled into the small intestine (36). Bile also has potent antimicrobial properties that can cause the induction of DNA damage and secondary structure formation in RNA and can also affect macromolecule stability and membrane stability (4).

A number of proteins have been shown to play a role in bile resistance in *L. monocytogenes*. Bile salt hydrolase (encoded by *bsh*) detoxifies bile by deconjugating the glycine/taurine side chain from the cholesterol core (4, 14). Studies have shown that deleting *bsh* results in a 2-fold reduction in the MIC of bile in comparison to the parent strain and reduces the ability of *Listeria* to colonize the GI tract and to cause subsequent systemic infection in animal models (6, 14). Deletion of a gene encoding a membrane-located bile exclusion system (*bilE*, bile Exclusion) results in a strain that is over 4 logs more sensitive to 30% bovine bile than the parent strain and that is significantly impaired in it's ability to cause oral infections in the

* Corresponding author. Mailing address: Department of Microbiology, University College Cork, College Road, Cork, Ireland. Phone: 353-21-4901363. Fax: 353-21-4903101. E-mail: c.gahan@ucc.ie.

† Supplemental material for this article may be found at http://iai.asm.org/.

▽ Published ahead of print on 11 October 2010.

mouse (6). Other genes shown to be involved in bile tolerance include *btlB*, *sigB*, *pva*, *prfA*, and *btlA* (4).

It has been shown that *L. monocytogenes* is capable of extracellular replication in the murine gallbladder during systemic infection (20), and we have independently replicated this finding (7). It is proposed that *L. monocytogenes* may reside in this location in an asymptomatic carrier state in a manner similar to *Salmonella enterica* serovar Typhi (20, 35). Indeed, *L. monocytogenes* organisms residing in the murine gallbladder are purged from this environment into the GI tract following gallbladder contraction, and this phase of infection may therefore be significant in terms of release of the pathogen from the mammalian host into the natural environment (21). Since *L. monocytogenes* is capable of extensive growth to high levels in the murine gallbladder, it is likely that this process plays a major role in the infectious process, with the gallbladder providing an immune-privileged reservoir for bacterial replication during infection (20).

The majority of studies examining the resistance of bacterial pathogens to bile utilize reconstituted powdered bile which has been extracted from animal gallbladders and dried. This process may damage specific components of bile. It has been suggested that the alcohol used during the preparation of powdered bile results in the precipitation of particular components (inorganic electrolytes, proteins, and biliary lipids) (18). Also, in order to reconstitute powdered bile in water, the solution must be heated to high temperatures, which may result in hydrolysis of bile acids. Furthermore, the level of reconstitution required to exactly mimic GB bile is not clear. In the present study we examined the growth of *L. monocytogenes* in fluid bile extracted directly from porcine gallbladders at slaughter (hereafter referred to as gallbladder [GB] bile) in order to more closely mimic the gallbladder environment. The data demonstrate that *L. monocytogenes* does not possess unique mechanisms for growth in GB bile and that the nonpathogenic species *L. innocua* and a range of other bacterial genera can grow equally efficiently on this substrate. We also demonstrate that Sigma B, BSH, and BilE are not important for growth in GB bile at pH 7 but are essential for survival when the pH drops to pH 5.5 under conditions that more closely replicate those encountered in the small intestine (9, 48). In addition, we carried out a mariner transposon screen for loci which play a role in growth in GB bile and found that pathways involved in amino acid biosynthesis, purine metabolism, and biotin uptake are required for efficient growth in this environment. We propose that porcine GB bile provides a relatively efficient growth environment for *L. monocytogenes*; however, systems required for specific metabolic processes are essential for replication by the pathogen in this environment.

MATERIALS AND METHODS

Media, chemicals, and growth conditions. The bacterial strains and plasmids used in the present study are listed in Table 1. Primers were sourced from Eurofins MWG and are listed in Table 2. *Escherichia coli* strains were grown in Luria-Bertani (LB) medium. *L. monocytogenes* was grown in brain heart infusion (BHI) broth. Defined medium (DM) was prepared as described by Premaratne et al. (34). Erythromycin, chloramphenicol, and kanamycin were made up as concentrated stocks and then added to media at the required levels. Where solid medium was required, agar was added at 1.5%. Porcine bile was extracted from porcine gallbladders manually and aliquoted into 1-ml lots. Samples were taken to ensure sterility. All sterile bile was stored at −80°C and thawed before use.

Construction and screening of a mariner-based transposon mutant bank. A mariner based transposon mutant bank was created in *L. monocytogenes* EGDe using the plasmid pMC38 (kindly provided by Hélène Marquis, Cornell University) as described as Cao et al. (10). Briefly, the plasmid pMC38 was transformed into electrocompetent *L. monocytogenes* cells. Transformants were selected at 30°C on BHI agar supplemented with 5 μg of erythromycin/ml. Isolated colonies were grown overnight in BHI broth containing erythromycin (5 μg/ml) and kanamycin (10 μg/ml) agitated at 30°C. This culture was subsequently diluted 1 in 200 into fresh BHI broth containing erythromycin and allowed to grow with agitation for 1 h at 30°C shaking. The temperature was then shifted to 40°C for approximately 6 h to reach an optical density at 600 nm of between 0.3 and 0.5. Aliquots of the culture were plated on BHI agar with erythromycin and then incubated overnight at 40°C. Individual colonies were selected and replica plated on BHI agar containing either erythromycin or kanamycin. This allowed a plasmid retention rate of 0.2% to be calculated. Colonies capable of growth on erythromycin plates but which failed to grow on kanamycin plates were used for screening.

For the screening procedure, selected mutants were inoculated individually into wells of a 96-well plate containing BHI and were statically incubated at 37°C overnight. The cultures grew to approximately 2×10^9 CFU/ml. They were then diluted in sterile phosphate-buffered saline (PBS) to a final concentration of 2×10^6 CFU/ml. This dilution was then used to inoculate a 96-well plate containing extracted porcine GB bile, resulting in 2×10^5 CFU/ml in each well. The inoculated 96-well plate was incubated statically at 37°C. After overnight growth, cultures from the 96-well plate were serially diluted to 10^{-4}, and dilutions were plated onto BHI agar plates, followed by incubation at 37°C overnight. Mutants that did not show growth comparable to that of the parent strain were isolated and retested individually.

Genetic manipulations and sequence analysis. In order to identify the transposon insertion site in clones exhibiting reduced growth in GB bile, chromosomal DNA was isolated by using a chromosomal kit (Sigma) according to the manufacturer's instructions. Identification of the insertion sites involved arbitrary PCR to amplify the DNA sequences flanking the transposon as described by Cao et al. (10). Briefly, two rounds of PCR were undertaken. In the first round, DNA fragments from the left and right ends of the transposon were amplified with primer pairs Marq207/255 and Marq207/269, respectively. For the second round, 5 μl of a 1/25 dilution from the first round of PCR was used in a 20-μl reaction. DNA fragments from the left and right ends of the transposon were amplified with primer pairs Marq208/256 and Marq208/270, respectively. The PCR products were sequenced, using primers Marq257 and Marq271 for the left and right ends of the transposon. Sequencing was carried out by Lark Technologies. Web-based analysis of the sequences led to the identification of the gene, and further *in silico* analysis was used to identify the predicted protein function, structure, and location within the listerial genome (http://www.ncbi.nlm.nih.gov/).

Complementation of transposon mutants. The site-specific phage integration vector pPL2 was used for complementation of transposon mutants. DNA extracted from the wild-type *L. monocytogenes* EGDe strain was used to amplify target genes and their flanking promoter regions using forward (CF) and reverse (CR) primers that were modified to contain restriction sites. In cases where the target gene was part of an operon, the upstream promoter region was amplified using primers C1 and C3. The target gene itself was amplified separately with the primers C2 and C4. The resulting products overlapped in sequence at the 3′ end for C1-C3 and at the 5′ end for C2-C4. PCR products were mixed in a 1:1 ratio and then subjected to 10 cycles of primerless PCR to allow splicing by overlap extension of the fragments, allowing in-frame target gene-promoter fusion. These fusion fragments were enriched using primers C1 and C2. PCR-cleaned amplifications were digested and ligated to a similarly cut pPL2 (26). The resulting ligation mixes were transformed into chemically competent Top10 cells, and transformants were selected on LB plates supplemented with 15 μg of chloramphenicol/ml. Plasmids were extracted by using the Qiagen QIAprep spin miniprep kit and sequenced using primers T3 and T7 to ensure the viability of the inserts. Extracted plasmids were ethanol precipitated and eluted in 7 μl of high-pressure liquid chromatography (HPLC) water. Then, 5 μl was electroporated into freshly prepared competent mutant cells. Transformants were selected on BHI plates containing 7.5 μg of chloramphenicol/ml. PCR was applied to confirm the presence of the gene, and phenotypic analysis was also carried out to confirm complementation.

Growth experiments. *L. monocytogenes* was routinely grown in BHI broth at 37°C shaking (200rpm). To examine growth in GB bile, cultures were first grown in BHI overnight. Cells were then washed twice in PBS and inoculated into GB bile at an approximate level of 2×10^5 CFU/ml. Cell growth was determined using viable cell counts by diluting cultures in PBS solution and enumeration on

TABLE 1. Bacterial strains and plasmids used in this study

Strain or plasmid	Relevant properties[a]	Source or reference
Strains		
Lactococcus lactis	Laboratory strain	UCC Culture Collection
Pseudomonas aeruginosa	Laboratory strain	UCC Culture Collection
Salmonella enterica serovar Typhimurium	Laboratory strain	UCC Culture Collection
Citrobacter rodentium	Laboratory strain	UCC Culture Collection
Cronobacter sakazakii	Laboratory strain	UCC Culture Collection
Staphylococcus aureus	Laboratory strain	UCC Culture Collection
Klebsiella pneumoniae	Laboratory strain	UCC Culture Collection
Escherichia coli		
O157:H7	Laboratory strain	UCC Culture Collection
DH5α	*supE44* Δ*lacU169* (ϕ80*lacZ*ΔM15)*R17 recA1 endA1 gyrA96 thi-1 relA1*	Gibco
Top10	Chemically competent intermediate host, plasmid-free	Invitrogen
Listeria monocytogenes		
EGDe	Wild-type strain, serotype 1/2a	W. Goebel
EGDe::pMC38-*purB*	EGDe derivative with an insertion in *purB*	This study
EGDe::pMC38-*hom*	EGDe derivative with an insertion in *hom*	This study
EGDe::pMC38-*lmo2566*	EGDe derivative with an insertion in *lmo2566*	This study
EGDe::pMC38-*hisC*	EGDe derivative with an insertion in *hisC*	This study
EGDe::pMC38-*proB*	EGDe derivative with an insertion in *proB*	This study
EGDe::pMC38-*lmo0598*	EGDe derivative with an insertion in *lmo0598*	This study
EGDe::pMC38-*purB* *pPL2-purB*	*purB* transposon mutant with *purB* integrated at $tRNA^{Arg}$-attB′	This study
EGDe::pMC38-*hom* *pPL2-hom*	*hom* transposon mutant with *hom* integrated at $tRNA^{Arg}$-attB′	This study
EGDe::pMC38-*lmo2566* *pPL2-lmo2566*	*lmo2566* transposon mutant with *lmo2566* integrated at $tRNA^{Arg}$-attB′	This study
EGDe::pMC38-*hisC* *pPL2-hisC*	*hisC* transposon mutant with *hisC* integrated at $tRNA^{Arg}$-attB′	This study
EGDe Δ*proBA*	EGDe derivative with *proBA* deleted	39
EGDe::pPL2*lux*-p_{Help}	EGDe derivative with constitutive high-level luciferase expression; Cm^r	34
Plasmids		
pPL2	Cm^r; integrates at the PSA phage attachment site within the $tRNA^{Arg}$ gene on the chromosome	23
pMC38	*Mariner* delivery vector with *B. subtilis* promoter P_{mrgA}; Kan^r Ery^r	10

[a] Cm^r, chloramphenicol resistant; Kan^r, kanamycin resistant; Ery^r, erythromycin resistant.

BHI agar. In cases where pH adjustments of bile were carried out, 1 M HCl was used. The pH was determined by using Panpeha pH strips (Sigma-Aldrich). Where bile was used as the growth medium, all growth curves were carried out using manual plate counts. Where DM was used as the growth medium, overnight cultures (grown in BHI) were washed twice in PBS solution and inoculated into DM at a level of 2%. The optical density at 600 nm was read every hour over a 48-h period automatically by using a Spectra Max 340 spectrophotometer (Molecular Devices, Sunnyvale, CA).

Scanning electron microscopy. Experiments were carried out in which constitutively luminescent (Lux-labeled) *L. monocytogenes* EGDe was inoculated directly into porcine gallbladders *ex vivo*. For inoculation of the organ, a 26G 1/2-in. needle was inserted into the bile duct, the inner membrane of the gallbladder was pierced, and the inoculum was injected. The bile duct was resealed after infection to avoid leakage of bile from the gallbladder. The organs were stored in open containers and placed in the IVIS Imaging station, where the luminescence was measured every hour over a 24 h period. The temperature was maintained at 37°C. At 24 h after inoculation into gallbladders, a portion of the gallbladder was removed and fixed in a primary fixative that consisted of 2% glutaraldehyde and 2.5% paraformaldehyde in 0.165 M phosphate buffer (pH 7.3). After primary fixation, specimens were washed in buffer, postfixed in 2% osmium tetroxide in the same buffer, dehydrated in graded acetones, and air dried from tetramethylsilane. Samples were mounted onto stubs using double-sided carbon tape. All samples were sputter coated with a thin layer of gold using a Bio-Rad Polaron sputter coating unit before being examined with a JEOL JSM-5510 scanning electron microscope. Digital electron micrographs were obtained of the areas of interest.

Statistical analysis. A Student *t* test was used for statistical analysis of data, and results with P values of <0.05 were considered statistically significant.

RESULTS

Bacterial growth in *ex vivo* porcine GB bile. Investigations of the physiological impact of bile upon bacterial growth typically utilize reconstituted powdered bile (e.g., oxgall or bile extract porcine), often in association with complex broth or agar media. This commercially available bile is normally a crude extract in which the soluble components of porcine or bovine bile are extracted with 80% alcohol and then dried. Thin-layer chromatography analysis indicated the presence of glycocholic acid (20 to 30%), taurocholic acid (30 to 40%), and taurodeoxycholic acid (4 to 7%) (Sigma). In order to more directly reflect the *in vivo* conditions encountered in the mammalian gallbladder, we utilized *ex vivo* porcine bile taken directly from gallbladders of pigs (GB bile). Porcine bile is considered similar to human bile in terms of chemical constituents, and HPLC analysis of both human and porcine bile shows that conjugation of bile salts to glycine is more prevalent in both hosts (60 to 70% and 85% in humans and pigs, respectively) (28, 38).

TABLE 2. PCR primers used in this study

Primer	Sequence (5′–3′)[a]
hom CF	TATAATGTCGACAGACTGTATGTAACGAACGAAATAATTTGCGCACTC
hom CR	TATAATGGATCCTTAACCCTCCACAACGGAATATTTTGCGAGCATTTGC
lmo2566 CF	TATAATGTCGACATACATTTGCTAAAAAAGAAGCTCCCTAGGCTTTTAG
lmo2566 CR	TAATATGGATCCTCAAGTAAGCACTTTATCATTTCGGGCAATTAAACG
purB C1	TATAATCTGCAGAAGAGAAGCTTACCTATGATGGTAGCTTC
purB C2	TATAATGGATCCTTATAATCCTAAACGATCAAAAATTAAGTCG
purB C3	CTTTACGAGTATAACGTTCTAACAT**TACGTGATCAACTCCTTAATAATC**
purB C4	**GATTATTAAGGAGTTGATCACGTAA**TGTTAGAACGTTATACTCGTAAAG
hisC C1	TATTATCTGCAGGCATAGTATAGAGTTTAGGGAAACCTAGGC
hisC C2	TATTATGGATTCTTACAATAATTTTTCTAAAAGTGCAATTACCGC
hisC C3	ACCTGCAAGAGATTTTTTCCATTTCAT**TCTGCTCATCTCTCCTTTTTATATTTC**
hisC C4	**GAAATAGAAAAAGGAGAGATGAGCA**GAATGAAATGGAAAAAATCTCTTGCAGGT
T3	GCAATTAACCCTCACTAAAGG
T7	TAATACGACTCACTATAGGG
Marq207	GGCCACGCGTCGACTAGTACNNNNNNNNNNGTAAT
Marq255	CAGTACAATCTGCTCTGATGCCGCATAGTT
Marq269	GCTCTGATAAATATGAACATGATGAGTGAT
Marq208	GGCCACGCGTCGACTAGTAC
Marq256	TAGTTAAGCCAGCCCCGACACCCGCCAACA
Marq270	TGTGAAATACCGCACAGATGCGAAGGGCGA
Marq257	CTTACAGACAAGCTGTGACCGTCT
Marq271	GGGAATCATTTGAAGGTTGGTACT

[a] Restriction enzymes are underlined. Complementary overhangs are indicated in boldface. CF, complement forward; CR, complement reverse.

We initially examined whether the ability to grow on GB bile is a particular property of *L. monocytogenes* (20) or whether it is shared by a variety of bacterial genera. Several Gram-negative and Gram-positive species were capable of using porcine GB bile as a growth medium, and only *S. aureus* grew relatively poorly in this environment (Fig. 1). Gram-negative organisms tested appear to be well adapted to utilizing GB bile as a growth medium and reached counts ranging from 2×10^7 CFU/ml to maximum counts of approximately 2×10^9 CFU/ml after 8 h, while the Gram-positive species *L. monocytogenes* and *Lactococcus lactis* reached numbers averaging 10^7 CFU/ml after the same period of time.

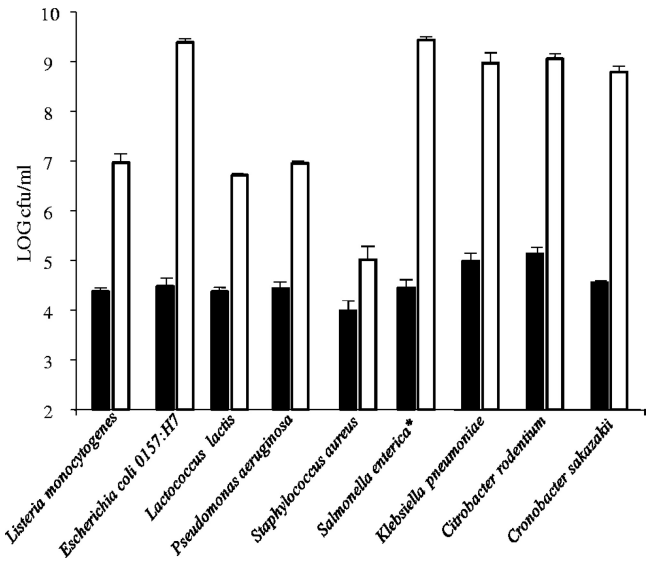

FIG. 1. Bacterial growth in *ex vivo* porcine GB bile. Black bars represent viable cell counts directly after initial inoculation into porcine GB bile. White bars represent bacterial CFU after 8 h of growth at 37°C. Error bars represent the standard deviations of triplicate experiments. *, Serovar Typhimurium.

Growth of *Listeria* species in GB bile. We focused upon *L. monocytogenes*, since it has been established that it can survive in mammalian gallbladders (20). *L. monocytogenes* EGDe and the nonpathogenic species *Listeria innocua* FH2033 demonstrated comparable growth rates in GB bile (Fig. 2A). Both *Listeria* strains had a doubling time of approximately 52 min in porcine bile, which is similar to that exhibited in a complex medium such as BHI (57 min). This suggests that bile, when it is stored in the gallbladder, does not represent a particularly stressful environment for *Listeria* species. In order to further analyze the dynamics of bacterial growth in the gallbladder environment *in situ*, a Lux-tagged *L. monocytogenes* EGDe strain (37) was inoculated through the bile duct into the lumens of freshly extracted porcine gallbladders. A separate gallbladder was inoculated with PBS as a negative control. Using an IVIS imaging system, the growth of luminescent *Listeria* could be monitored directly in the gallbladder in real time. We observed a significant increase in bioluminescence and spread of the bioluminescent bacterium throughout the organ (illustrated in Fig. 2B). Growth of *L. monocytogenes in situ* in the gallbladder was confirmed by performing standard plate counts of the luminal contents. An ~100-fold increase was recorded within 24 h.

Samples were also taken from a portion of the *Listeria*-infected and an uninfected gallbladder wall and were subjected to scanning electron microscopy (Fig. 2C and D). We clearly observed listerial cell attachment to the epithelial surface with no evidence of biofilm formation and no abnormal bacterial cell morphology within the 24-h time period.

Genetic elements previously shown to be involved in bile tolerance are not essential for growth in porcine bile. A number of genetic loci have been identified that are essential for the bile tolerance of *L. monocytogenes*. The analysis of the role

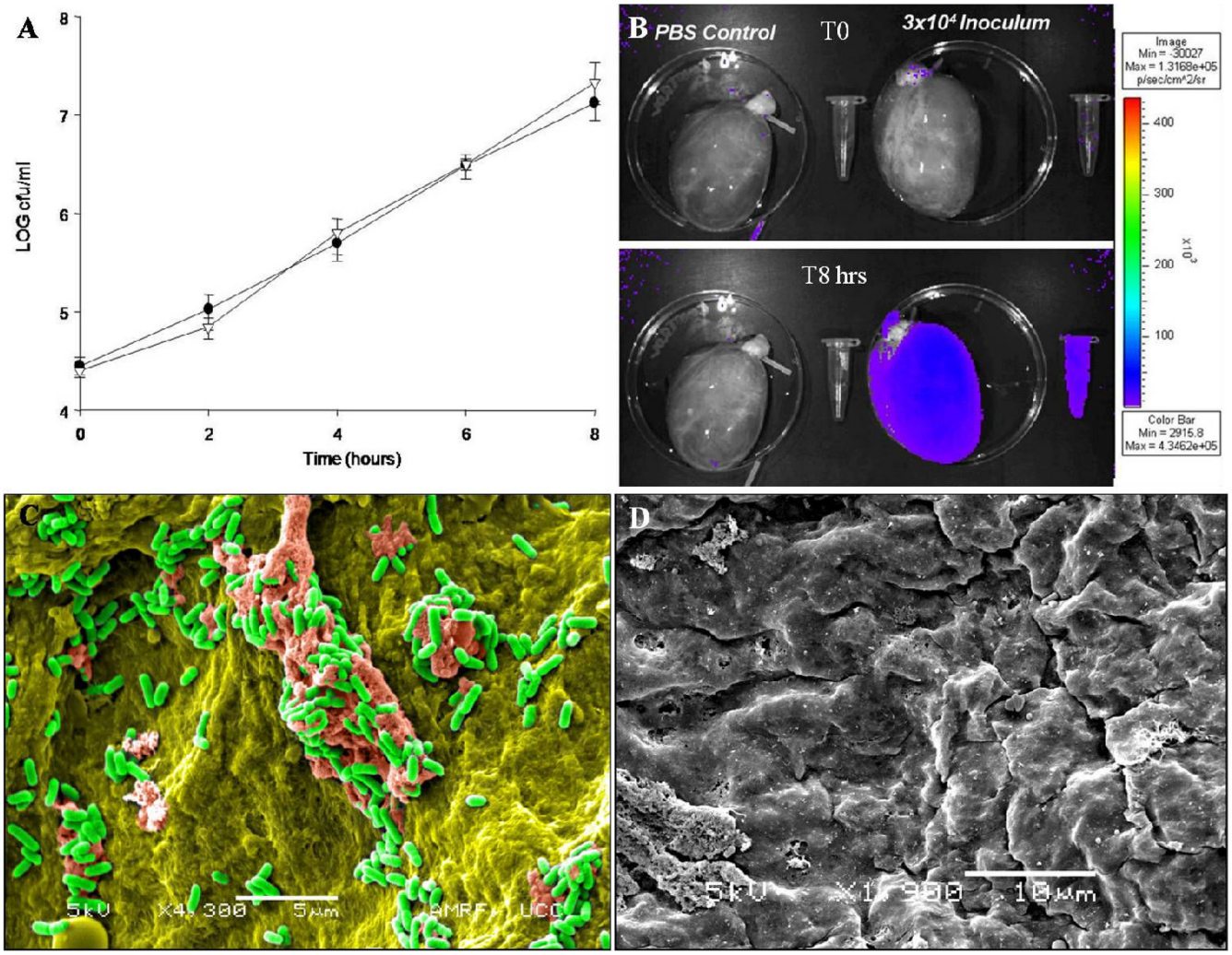

FIG. 2. Growth of *Listeria* species in GB bile. (A) Growth of *Listeria monocytogenes* EGDe (●) and *Listeria innocua* FH2033 (△) in *ex vivo* porcine GB bile. Viable cell counts were carried out at intervals after dilution in one-quarter-strength Ringer's solution and enumeration on BHI. Each time point represents the mean value of at least three independent experiments. (B) Lux-tagged *L. monocytogenes* strain inoculated into porcine gallbladders imaged under the IVIS system. (C) Scanning electron micrographs of epithelial cells lining the lumen of porcine gallbladder. False colored infected gallbladder shows listerial cells attached to the wall of the lumen. (D) Uninfected gallbladder shows no bacterial cells.

of these loci in bile tolerance was originally carried out by researchers using reconstituted powdered bile. The loci examined include a bile salt hydrolase (*bsh*) (6, 14), the bile exclusion system (*bilE*) (44), the principal virulence regulator (*prfA*), and the stress sigma factor (*sigB*) (6). Here, a clean deletion mutant at each of these loci was inoculated into GB bile at similar levels ($\sim 2 \times 10^4$ CFU/ml). Each mutant demonstrated growth comparable to the parent strain, indicating that none of these genetic determinants are essential for the survival or growth of the pathogen in the gallbladder environment (Fig. 3). As bile from the gallbladder is released into the duodenum, it mixes with chyme from the stomach, thereby reducing the local pH to as low as pH 5.2 (9, 48). In order to mimic the chemical nature of bile encountered during infection of the small intestine, we lowered the pH of our porcine GB bile from pH 7.0 to 8.0 to approximately pH 5.5 *in vitro*. The wild-type and mutant *Listeria* strains were subsequently inoculated into GB bile at pH 5.5. After a 6-h exposure to GB bile adjusted to pH 5.5, both the parent strain and the *prfA* mutant were unable to grow, and their numbers remained static. However, mutants in *sigB*, *bsh*, and *bilE* were undetectable after 6 h in this environment, confirming their role in bile tolerance at pH 5.5 (Fig. 3). Control experiments determined that all mutants survived at levels similar to that of the wild type in BHI at pH 5.5 in the absence of bile, indicating no added sensitivity to this pH under normal conditions (data not shown). Collectively, the data suggest that these loci do not play a role in the ability of *L. monocytogenes* to grow in GB bile under the conditions encountered in the gallbladder (pH 7). However, under conditions that mimic the upper small intestine where the pH of the lumen is reduced, bile becomes toxic, and the bacterium requires these proteins in order to survive.

Creation and screening of a mariner transposon bank identifies six genetic loci required for growth of *L. monocytogenes* EGDe in GB bile. To identify genetic determinants that facilitate listerial growth in the gallbladder, a mariner transposon

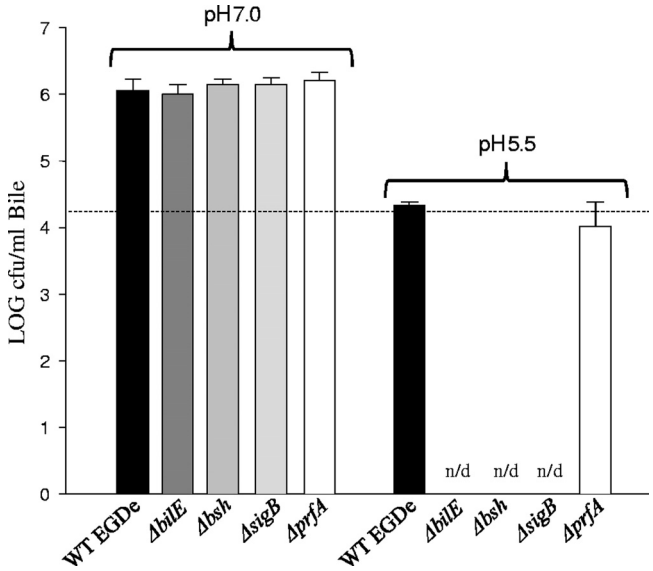

FIG. 3. Growth of specific *L. monocytogenes* mutants in *ex vivo* GB bile. *L. monocytogenes* EGDe and isogenic *bilE*, *bsh*, *sigB*, and *prfA* deletion mutants show comparable growth in GB bile at pH 7 after 6 h. At the reduced pH of 5.5 the Δ*bilE*, Δ*bsh* and Δ*sigB* mutants are undetectable after a 6-h period, whereas the Δ*prfA* mutant is comparable to wild-type levels. The broken line is indicative of the initial inoculums. Error bars represent the standard deviations of triplicate experiments. ND, not detected.

mutant bank was subjected to a negative screen (screened for an inability to grow in GB bile). We examined approximately 5,000 mutants created using the mariner transposon system (10). Individual mutants were inoculated into porcine GB bile, and growth was determined by enumeration on BHI agar plates. Mutants that showed reduced numbers compared to the parent strain were isolated and re-assayed to confirm the phenotype. The exact site of transposon insertion was identified by an arbitrary PCR approach, followed by sequencing of the insertion site. The screen resulted in the isolation of nine transposon mutants (0.18% of the total screened) showing reduced potential for growth compared to the wild-type strain using porcine bile as a sole substrate. Sequencing revealed six distinct mutants, with insertions in *purB*, *hom*, *lmo2566*, *hisC*, *lmo0598*, and *proB* (Fig. 4). In instances where more than one mutation of the same gene was identified, one mutant was selected for further analysis. Each mutant was characterized phenotypically and bioinformatically (Table 3).

Phenotypic and *in silico* analysis of mutants affected in GB bile growth reveals that specific metabolic pathways are necessary for growth in bile. Genetic loci required for growth using GB bile as a sole substrate were investigated further for each locus. All six mutants displayed growth rates similar to the parent strain when grown in BHI (pH 7) at 37°C, indicating that disruptions of the genes in question were not necessary for growth under normal physiological conditions (data not shown). Phenotypic characterizations are described for each individual gene below.

purB. Three separate mutants were independently recovered with disruptions in the *purB* gene. This gene is annotated as an adenylosuccinate lyase which catalyzes two separate reactions in the *de novo* biosynthesis of purines. Its nearest nonlisterial homolog is adenylosuccinate lyase from *Bacillus* sp. strain NRRL B-14911 (84% identity); however, this protein is highly conserved across many bacterial species being found in *Salmonella*, *Bacillus*, *Shigella*, *Staphylococcus*, and *Helicobacter*. The disruption of this gene resulted in a loss of growth potential in GB bile in comparison to the parent strain. On examination of the pathways where this gene plays a role, it became clear that exogenous addition of certain components may restore growth. Of those tested, the addition of purine adenine (1.6 mM) restored the growth of the mutant to wild-type levels in GB bile, whereas the addition of guanine did not, indicating that the mutation is specific to adenine biosynthesis. Since *purB* is

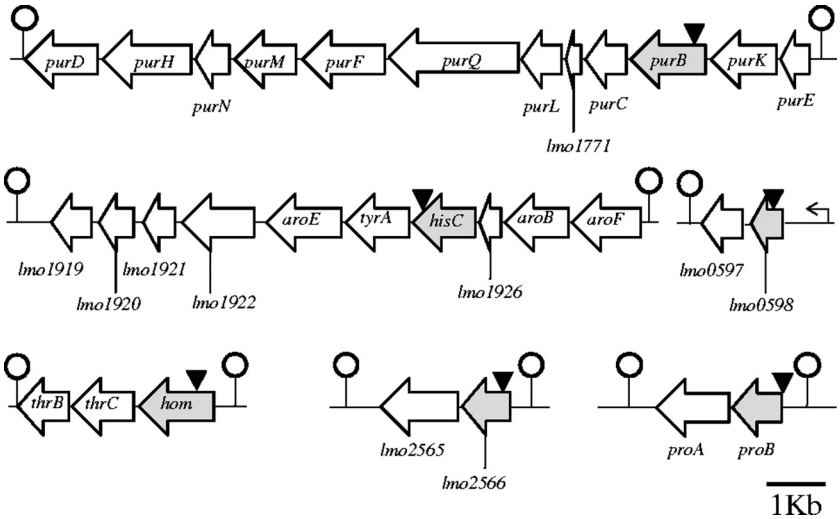

FIG. 4. Genomic organization of insertion sites in transposon mutants incapable of efficient growth in GB bile. The diagram was drawn approximately to scale using *Listeria monocytogenes* EGDe genome sequence data. Open reading frames (shaded in gray) are genes with transposon insertion. Black arrowheads represent the approximate location of transposon insertion. White open reading frames are flanking genes. Lollipops indicate predicted terminator locations.

part of a large operon of open reading frames, which are all involved in purine metabolism, *purB* was introduced in *trans* by cloning the intact gene and its promoter region into the vector pPL2 with subsequent integration in single copy into the chromosome of the transposon mutant. This complementation restored growth of the mutant strain to levels comparable to the wild-type in GB bile, confirming that the phenotype observed was due to the loss of PurB and was not a pleiotropic effect (Fig. 5).

hom. Two mutants defective in growth in GB bile were identified as having an insertion in the *hom* locus (*lmo2547*). This protein shows high similarity to homoserine dehydrogenase which catalyzes the formation of L-aspartate 4-semialdehyde from L-homoserine in the production of numerous amino acids, including serine and threonine. In *L. monocytogenes* the *hom* gene shows greatest homology to a putative homoserine dehydrogenase of *Carnobacterium piscicola* (70% identity). Interruption of this gene resulted in a 2.5-log reduction in growth in GB bile compared to the wild-type strain. Exogenous addition of the amino acid threonine to GB bile provided the conditions necessary for the mutant to replicate and reach numbers similar to the wild type after 8 h growth. Addition of the amino acids glycine and methionine partially restored growth, whereas addition of cysteine, serine, and lysine had no impact on growth restoration (data not shown). Similar to the observations of Marquis et al. (29), the mutant had a threonine requirement of 10 mM for complete growth restoration. Genetic complementation using the pPL2 vector significantly restored growth of the mutant in GB bile.

lmo2566. Another mutant with impaired GB bile growth properties revealed a transposon insertion in *lmo2566*, the function of which is unknown. The gene has a biotin/lipoate A/B ligase family conserved domain, indicating that it may be involved in the attachment of either biotin or lipoate to enzymes that require them as cofactors. We suggest that this locus represents a lipoate ligase since the gene shares homology (73% positives) with lipoate protein ligase A of *Bacillus subtilis* NRRL B-14911 and with 2 already identified lipoate protein ligases in *L. monocytogenes*: LplA1 (*lmo0931*; 31% identity and 55% positives over 55 amino acids) and LplA2 (*lmo0764*; 22% identity and 39% positives over 152 amino acids). Lipoate protein ligases have a highly conserved region, and alignments of *lpl*'s from different bacterial species identify a characteristic sequence motif RxSGGXAVXXDXGX (16, 24) (see Fig. S1 in the supplemental material). In GB bile a disruption mutant in this gene exhibited a 2.0-log reduction in numbers after 8 h of growth compared to the wild type. The exogenous addition of both biotin and lipoic acid did not provide the conditions necessary for the mutant to grow in GB bile. This finding is not surprising considering that the function of protein ligases is to attach moieties to their corresponding proteins. However, a genetic complement of *lmo2566* using the pPL2 vector fully restored growth in GB bile (Fig. 5). We noted that the transposon insertion into *lmo2566* also results in a small-colony phenotype (however, growth in BHI broth is not affected).

hisC. The fourth mutant defective for growth in GB bile was identified as *hisC* (*lmo1925*), with a transposon inserted at amino acid 297. The product of this genetic locus is a transaminase thought to be involved in the metabolism and the bio-

TABLE 3. Overview of mutants isolated from GB bile screen

Gene	Size (bp)	Transposon insertion site(s) (bp position)[a]	Annotation	Function	Growth in:		Complementation	
					Bile (compared to WT)	Defined medium	Genetic	Complementation
purB (*lmo1773*)	1,293	44, 681, 1207	Adenylosuccinate lyase	Purine metabolism; alanine and aspartate metabolism	~3-log reduction	No growth	pPL2::*purB* in bile: restoration of growth	+ Adenine in bile: restoration of growth
hom								
lmo2547	1,287	438, 837	Homoserine dehydrogenase	Glycine, threonine, and serine metabolism; lysine biosynthesis	~2.0-log reduction	No growth	pPL2::*hom* in bile: restoration of growth	+ Threonine in bile: restoration of growth
lmo2566	837	211	Unknown	Unknown	~2.0-log reduction	Growth	pPL2::*lmo2566* in bile: restoration of growth	NA (biotin/lipoate: no restoration)
hisC								
lmo1925	1,083	889	Similar to histidinol-phosphate aminotransferase and tyrosine/phenylalanine aminotransferase	Amino acid metabolism; novobiocin biosynthesis	~2-log reduction	No growth	pPL2::*hisC* in bile: partial restoration of growth	+ Casamino Acids restoration of growth; histidine, phenylalanine, and tyrosine: no restoration
lmo0598	549	354	Similar to proteins involved in biotin metabolism (BioY)	Metabolism of coenzymes and prosthetic groups	~3-log reduction	Growth	NA[b]	+ Biotin in bile; restoration of growth
proB (*lmo1260*)	831	–27	Gamma-glutamyl kinase	Proline metabolism	~1.0-log reduction	No growth	NA	+ Proline in bile: restoration of growth

[a] More than one transposon insertion site is indicative of individual clones isolated multiple times.
[b] NA, not achievable.

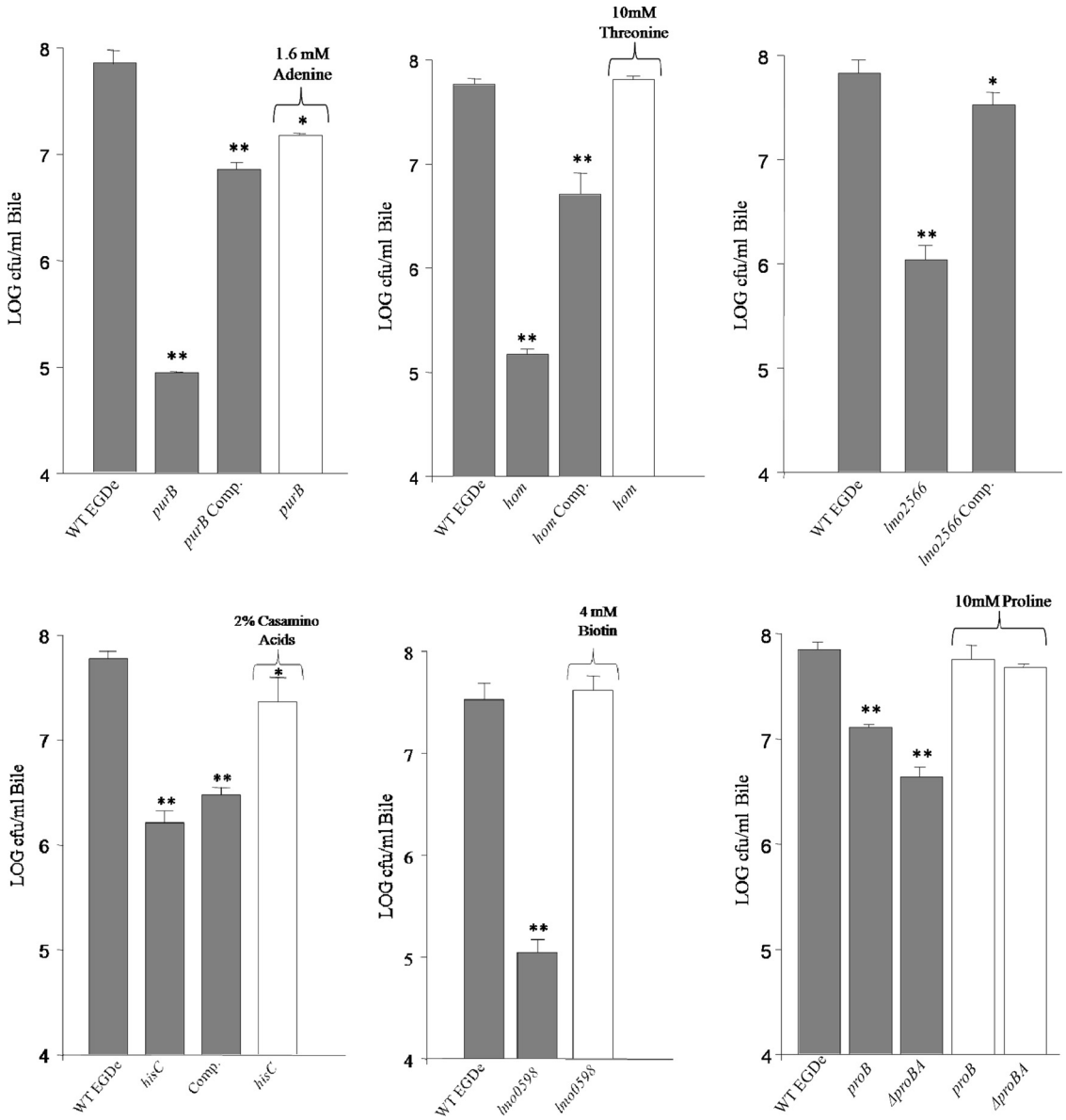

FIG. 5. Reduced growth of specific transposon mutants in GB bile following 8 h of incubation at 37°C. Gray bars represent the growth of specific mutants in GB bile with no supplements. White bars represent GB bile with an additional supplement as indicated above the bar. The error bars represent the standard deviations of triplicate experiments. **, $P < 0.02$; *, $P < 0.05$ (as determined by the Student *t* test compared to the wild-type control group). Gene names are indicative of transposon mutations at this locus. A "Δ" symbol indicates clean in-frame deletion. Comp, genetic complementation using vector pPL2.

synthesis of various amino acids, including phenylalanine and tyrosine. When challenged to grow in GB bile, a mutation in this gene resulted in a 2-log reduction in numbers after an 8-h period. Although exogenous addition of the amino acids histidine, phenylalanine, and tyrosine both singularly and in combination failed to restore growth of the mutant, a complete mixture of essential amino acids (excluding tryptophan) (Casamino Acids) was capable of chemically restoring growth in GB bile (Fig. 5).

lmo0598. The transposon insertion in the fifth mutant was mapped to *lmo0598*, which is described as being similar to proteins involved in biotin metabolism. This locus is homologous to gene EF3072 of *Enterococcus faecalis* V583, which encodes a BioY family protein, a component of the BioMNY transport system that is involved in the uptake of biotin. GB bile growth of this transposon mutant resulted in a 3-log reduction in growth in comparison to the wild-type after 8 h. The exogenous addition of 4 mM biotin to GB bile fully restored the growth of the mutant (Fig. 5).

proB. For the final mutant characterized, the transposon has inserted in the intergenic region between *lmo1261* and *proB.* The transposon inserted after the terminator of *lmo1261* and 27 nucleotides before the start codon of *proB* (*lmo1260*). As a result, the phenotype observed is most likely to be due to an impact on the expression of *proB*. This gene encodes a gamma-glutamyl kinase that catalyzes the formation of glutamate

5-phosphate from glutamate in proline biosynthesis. The transposon location in this case resulted in a 1-log reduction in growth in GB bile compared to the parent strain after 8 h. A clean deletion of *proA* and *proB* constructed in this lab (42) was subsequently examined for growth in GB bile and showed a phenotype similar to that of the transposon mutant. Previous analysis of the *proB* deletion mutant demonstrated that exogenous addition of 10 mM proline was sufficient to restore growth of the mutant (42). This was also the case in GB bile, and growth was restored to wild-type levels.

DISCUSSION

Numerous bacterial genera, including pathogens (such as *Helicobacter*, *Salmonella*, and *Klebsiella* spp.) and commensal organisms (commensal *E. coli* and *Lactobacillus salivarius*) have been associated with human gallbladder infection (cholecystitis) (1, 19, 40, 51). Bacterial colonization of the gallbladder has also been implicated in gallstone formation, although a direct causal link has not been definitively established (30). Certainly there is a link between inflammation and gallstone formation within the gallbladder, and bacteria have been isolated from gallstones (30). Chronic infection of gallbladders with *Salmonella enterica* serovar Typhi is associated with persistent carriage and shedding of the pathogen. Carriage is most likely mediated after infection of the gallbladder wall and is associated with an ability to form biofilms on the surface of cholesterol gall stones in the lumen of the gallbladder (32). Despite a wealth of studies reporting bacterial colonization of the gallbladder, molecular genetic analyses of bacterial growth in this environment are lacking. Many reports consider that GB bile represents a harsh environment for bacterial survival and is an impediment to growth (33). Other studies utilize powdered bile reconstituted in rich broth for analyses and may therefore not provide an accurate model of this environment (12, 35).

In the present study we investigated the growth of *L. monocytogenes* in *ex vivo* porcine GB bile extracted from intact gallbladders following slaughter. *L. monocytogenes* is known to colonize the gallbladders of mice during infection and to reach a high bacterial load in this environment (7, 20). However, relatively little is known about the dynamics of bacterial growth in this environment or the molecular mechanisms that allow adaptation to growth in GB bile. Indeed, it has been proposed that *L. monocytogenes* may possess enhanced or unique bile resistance mechanisms that allow survival in the gallbladder (20).

In our initial studies, we determined that most bacterial genera tested (with the exception of *S. aureus*) were capable of efficient replication in GB bile. This indicates that the nutrient content of GB bile is sufficient to support efficient bacterial growth and that there is no unique, specialized mechanism in *L. monocytogenes* which permits growth in this environment. Indeed, *L. monocytogenes* was capable of growth rates similar to those of the nonpathogenic species *L. innocua*. Electron microscopy of *L. monocytogenes* cells inoculated into porcine gallbladders *ex vivo* did not reveal any unusual features of listerial growth in this environment (such as chain formation or elongation). We also did not see evidence of biofilm formation. However, this does not rule out formation of biofilms in *L. monocytogenes* at a later stage of gallbladder infection (5). Overall, the data suggest that the ability of bacteria to colonize the gallbladder is dependent upon access to the luminal environment. The ability of *L. monocytogenes* to invade and replicate intracellularly and to cross epithelial barriers (27) is most likely key to accessing the lumen of the gallbladder and, once in this environment, the bacterium can replicate to high levels (the present study). Further work to determine the molecular mechanisms by which *L. monocytogenes* targets and invades the murine gallbladder is ongoing in our laboratory.

Molecular systems previously determined to play a role in bile tolerance in *L. monocytogenes* (BSH, BilE, and Sigma B) were not required for growth in *ex vivo* GB bile as a growth substrate. However, when we lowered the pH of GB bile to pH 5.5 using hydrochloric acid, the toxicity of the GB bile increased. Under these conditions Sigma B-regulated systems (BSH, BilE, and Sigma B itself) were required for the survival of *L. monocytogenes*. This is consistent with a previous study that examined the effect of individual bile acids upon survival of *L. monocytogenes* at different pHs (6). Collectively, the work indicates that these bile resistance mechanisms are not required for growth in *ex vivo* GB bile but are important for survival in bile under low-pH conditions (similar to those encountered in the duodenum where bile mixes with chyme from the stomach [9, 48]). This indicates a fundamental difference between the nature of bile in the gallbladder and bile within the small intestine, where antibacterial effects are enhanced. In particular, glycoconjugated bile acids exhibit enhanced bactericidal activity at low pH (4), and it is likely that glycoconjugated bile acids are responsible for the inhibitory effects that occur when the pH of GB bile is reduced.

Relatively little is known about the molecular mechanisms by which bacteria can grow in the lumen of the gallbladder. In order to gain an insight into the mechanisms used by *L. monocytogenes* to grow in this environment, we created a mariner transposon bank and screened for mutants with a reduced ability to grow in GB bile. In total, nine mutants were recovered representing mutations in 6 loci. Mutation of *purB* significantly affected growth of *L. monocytogenes* in GB bile. This locus encodes an enzyme responsible for biosynthesis of adenine and also the amino acids aspartate, alanine, and glutamate. Uptake of adenine in this environment was most likely mediated through the listerial purine salvage pathway (46). The results indicate that adenine is limiting in GB bile and that active synthesis of adenine is necessary in *L. monocytogenes* in order to grow in this environment.

Similarly, mutants in genes encoding enzymes required for amino acid biosynthesis were identified in the present study and indicate a requirement for synthesis of specific amino acids during growth in GB bile. Disruption of the gene encoding the enzyme homoserine dehydrogenase (*hom*) resulted in a mutant that was auxotrophic for threonine. The addition of threonine to GB bile restored growth of the mutant, indicating the presence in *L. monocytogenes* of a threonine transport system (39). Since *L. monocytogenes* is capable of utilizing peptides as a source of amino acids (47), it is possible that the moderate growth seen for the *hom* mutant in GB bile is due to uptake of peptides from this environment. A disruption to *hisC*, an aminotransferase involved in the synthesis of aromatic amino acids such as phenylalanine and histidine resulted in a strain exhib-

iting reduced growth in GB bile. Although this defect could be restored via the exogenous addition of a pool of essential amino acids, growth could not be restored via the addition of the aromatic amino acids alone. Future work in this area could investigate whether addition of aromatic amino acid-containing peptides is sufficient to restore growth of this mutant and could confirm that GB bile is indeed deficient in these compounds. A mutant in the *proB* gene encoding an enzyme involved in proline biosynthesis was auxotropic for proline and showed significantly reduced growth in GB bile. A clean deletion mutant in *proBA* (42) demonstrated a similar phenotype and growth of both mutants in GB bile could be restored through the addition of exogenous proline.

Biotin is an essential vitamin required by all organisms and acts as a cofactor for important metabolic enzymes, including those involved in amino acid and fatty acid biosynthesis (3). Unlike many other microorganisms, including *Salmonella* spp. and *Bacillus* spp., *L. monocytogenes* is incapable of *de novo* biotin biosynthesis (22). Instead, the pathogen is efficient in sequestering biotin from exogenous sources. We determined that a transposon mutation in a gene encoding a putative biotin transporter (*lmo0598*) significantly reduced growth of *L. monocytogenes* in GB bile even though the growth of the mutant was not affected in either complex or defined media. Addition of biotin to GB bile restored growth of the mutant in this environment, indicating that another transporter capable of mediating biotin uptake is active in this pathogen. Studies examining the bioavailability of biotin following administration in rats or pigs indicated that the majority of biotin is excreted in the urine and that biliary excretion of biotin is quantitatively negligible (52). Mutation of a gene, *lmo2566*, encoding an enzyme containing a putative biotin and lipoate protein ligase superfamily domain also reduced the growth rate of *L. monocytogenes* in GB bile. This phenotype could be restored through genetic complementation with the intact *lmo2566* gene, but addition of either biotin or lipoate to GB bile did not restore growth potential. The mutant was capable of normal growth in complex or defined media, suggesting that GB bile is lacking in some essential component that we could not identify.

In conclusion, we demonstrate that bile taken directly from the gallbladder is generally supportive of bacterial growth and that *L. monocytogenes* does not possess specific or unique molecular mechanisms to permit growth in this environment. However, a reduction in the pH of GB bile to mimic the environment in the duodenum increases the toxicity of bile for *L. monocytogenes* and under these conditions specific resistance mechanisms (BSH, BilE, and Sigma B) are required for survival. The use of a transposon mutagenesis approach revealed that enzymes involved in specific metabolic processes such as adenine biosynthesis, synthesis of particular amino acids, and biotin transport are necessary for growth using GB bile as a substrate. The results provide insights into the nutritional components of GB bile that may be limiting for bacterial growth and the mechanisms required by *L. monocytogenes* to grow in this environment. Future work in our laboratory will examine our transposon mutants for growth in gallbladders in infected mice; however, since many of these mutants are auxotrophic, it is likely that they will also be affected in intracellular growth and may therefore be inefficient in accessing the gallbladder during the infectious process. It is clear from the present study that bile in the gallbladder at neutral pH may represent a nontoxic growth environment for *L. monocytogenes* (and for many bacteria in general) but upon secretion into the duodenum toxicity is increased as a barrier to infection (Fig. 6).

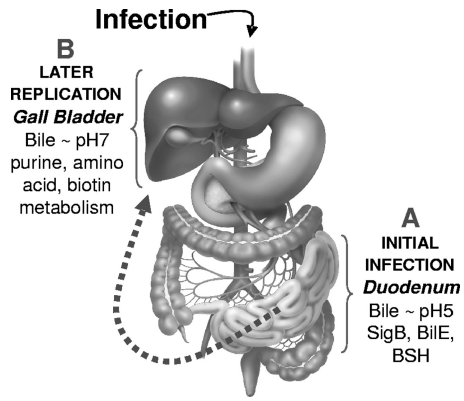

FIG. 6. Schematic outlining the interaction of *L. monocytogenes* with bile during infection. (A) *L. monocytogenes* encounters bile at reduced pH (~pH 5.5) within the duodenum after oral infection. In this environment specific resistance mechanisms (BSH, BilE, and their regulator Sigma B) are required for bacterial survival (6, 14, 44). (B) Infection of the gallbladder is mediated by an as-yet-undetermined mechanism. Growth in GB bile within the lumen requires specific metabolic processes but is independent of specific resistance mechanisms (the present study).

ACKNOWLEDGMENTS

G.C.D. is funded by Science Foundation Ireland under the Research Frontiers Programme (05/RFP/Gen0021). We acknowledge the continued financial assistance of the Alimentary Pharmabiotic Centre, funded by Science Foundation Ireland.

We are indebted to Maíre Begley for providing helpful advice throughout this project. We also thank Peadar Lawlor from Moorepark Food Research Centre, Fermoy, Ireland, for assistance in obtaining porcine GB bile. We thank Suzanne Crotty for help with electron microscopy work.

REFERENCES

1. **Abeysuriya, V., K. I. Deen, T. Wijesuriya, and S. S. Salgado.** 2008. Microbiology of gallbladder bile in uncomplicated symptomatic cholelithiasis. Hepatobiliary Pancreat. Dis. Int. **7:**633–637.
2. **Allerberger, F., and M. Wagner.** 2009. Listeriosis: a resurgent food-borne infection. Clin. Microbiol. Infect. **16:**16–23.
3. **Beckett, D.** 2007. Biotin sensing: universal influence of biotin status on transcription. Annu. Rev. Genet. **41:**443–464.
4. **Begley, M., C. G. Gahan, and C. Hill.** 2005. The interaction between bacteria and bile. FEMS Microbiol. Rev. **29:**625–651.
5. **Begley, M., C. Kerr, and C. Hill.** 2009. Exposure to bile influences biofilm formation by Listeria monocytogenes. Gut Pathog. **1:**11.
6. **Begley, M., R. D. Sleator, C. G. Gahan, and C. Hill.** 2005. Contribution of three bile-associated loci, *bsh*, *pva*, and *btlB*, to gastrointestinal persistence and bile tolerance of *Listeria monocytogenes*. Infect. Immun. **73:**894–904.
7. **Bron, P. A., I. R. Monk, S. C. Corr, C. Hill, and C. G. Gahan.** 2006. Novel luciferase reporter system for in vitro and organ-specific monitoring of differential gene expression in *Listeria monocytogenes*. Appl. Environ. Microbiol. **72:**2876–2884.
8. **Cairns, B. J., and R. J. Payne.** 2009. Sudden increases in listeriosis rates in England and Wales, 2001 and 2003. Emerg. Infect. Dis. **15:**465–468.
9. **Campbell, I.** 2009. The mouth, stomach and intestines. Anaesthesia Intensive Care Med. **10:**336–338.
10. **Cao, M., A. P. Bitar, and H. Marquis.** 2007. A mariner-based transposition system for *Listeria monocytogenes*. Appl. Environ. Microbiol. **73:**2758–2761.
11. **Cotter, P. D., K. O'Reilly, and C. Hill.** 2001. Role of the glutamate decar-

boxylase acid resistance system in the survival of *Listeria monocytogenes* LO28 in low pH foods. J. Food Prot. **64:**1362–1368.
12. **Crawford, R. W., D. L. Gibson, W. W. Kay, and J. S. Gunn.** 2008. Identification of a bile-induced exopolysaccharide required for *Salmonella* biofilm formation on gallstone surfaces. Infect. Immun. **76:**5341–5349.
13. **Drevets, D. A., and M. S. Bronze.** 2008. Listeria monocytogenes: epidemiology, human disease, and mechanisms of brain invasion. FEMS Immunol. Med. Microbiol. **53:**151–165.
14. **Dussurget, O., D. Cabanes, P. Dehoux, M. Lecuit, C. Buchrieser, P. Glaser, and P. Cossart.** 2002. *Listeria monocytogenes* bile salt hydrolase is a PrfA-regulated virulence factor involved in the intestinal and hepatic phases of listeriosis. Mol. Microbiol. **45:**1095–1106.
15. **Freitag, N. E., G. C. Port, and M. D. Miner.** 2009. *Listeria monocytogenes*: from saprophyte to intracellular pathogen. Nat. Rev. Microbiol. **7:**623–628.
16. **Fujiwara, K., S. Toma, K. Okamura-Ikeda, Y. Motokawa, A. Nakagawa, and H. Taniguchi.** 2005. Crystal structure of lipoate-protein ligase A from *Escherichia coli*: determination of the lipoic acid-binding site. J. Biol. Chem. **280:**33645–33651.
17. **Goulet, V., C. Hedberg, A. Le Monnier, and H. de Valk.** 2008. Increasing incidence of listeriosis in France and other European countries. Emerg. Infect. Dis. **14:**734–740.
18. **Gruy-Kapral, C., K. H. Little, J. S. Fordtran, T. L. Meziere, L. R. Hagey, and A. F. Hofmann.** 1999. Conjugated bile acid replacement therapy for short-bowel syndrome. Gastroenterology **116:**15–21.
19. **Hamada, T., K. Yokota, K. Ayada, K. Hirai, T. Kamada, K. Haruma, K. Chayama, and K. Oguma.** 2009. Detection of *Helicobacter hepaticus* in human bile samples of patients with biliary Disease. Helicobacter **14:**545–551.
20. **Hardy, J., K. P. Francis, M. DeBoer, P. Chu, K. Gibbs, and C. H. Contag.** 2004. Extracellular replication of *Listeria monocytogenes* in the murine gallbladder. Science **303:**851–853.
21. **Hardy, J., J. J. Margolis, and C. H. Contag.** 2006. Induced biliary excretion of *Listeria monocytogenes*. Infect. Immun. **74:**1819–1827.
22. **Hebbeln, P., D. A. Rodionov, A. Alfandega, and T. Eitinger.** 2007. Biotin uptake in prokaryotes by solute transporters with an optional ATP-binding cassette-containing module. Proc. Natl. Acad. Sci. U. S. A. **104:**2909–2914.
23. **Hofmann, A. F.** 1999. The continuing importance of bile acids in liver and intestinal disease. Arch. Intern. Med. **159:**2647–2658.
24. **Kim, D. J., K. H. Kim, H. H. Lee, S. J. Lee, J. Y. Ha, H. J. Yoon, and S. W. Suh.** 2005. Crystal structure of lipoate-protein ligase A bound with the activated intermediate: insights into interaction with lipoyl domains. J. Biol. Chem. **280:**38081–38089.
25. **Koch, J., and K. Stark.** 2006. Significant increase of listeriosis in Germany: epidemiological patterns 2001–2005. Eur. Surveill. **11:**85–88.
26. **Lauer, P., M. Y. N. Chow, M. J. Loessner, D. A. Portnoy, and R. Calendar.** 2002. Construction, characterization, and use of two *Listeria monocytogenes* site-specific phage integration vectors. J. Bacteriol. **184:**4177–4186.
27. **Lecuit, M.** 2007. Human listeriosis and animal models. Microbes Infect. **9:**1216–1225.
28. **Legrand-Defretin, V., C. Juste, R. Henry, and T. Corring.** 1991. Ion-pair high-performance liquid chromatography of bile salt conjugates: application to pig bile. Lipids **26:**578–583.
29. **Marquis, H., H. G. Bouwer, D. J. Hinrichs, and D. A. Portnoy.** 1993. Intracytoplasmic growth and virulence of *Listeria monocytogenes* auxotrophic mutants. Infect. Immun. **61:**3756–3760.
30. **Maurer, K. J., M. C. Carey, and J. G. Fox.** 2009. Roles of infection, inflammation, and the immune system in cholesterol gallstone formation. Gastroenterology **136:**425–440.
31. **Mead, P. S., L. Slutsker, V. Dietz, L. F. McCaig, J. S. Bresee, C. Shapiro, P. M. Griffin, and R. V. Tauxe.** 1999. Food-related illness and death in the United States. Emerg. Infect. Dis. **5:**607–625.
32. **Menendez, A., E. T. Arena, J. A. Guttman, L. Thorson, B. A. Vallance, W. Vogl, and B. B. Finlay.** 2009. *Salmonella* infection of gallbladder epithelial cells drives local inflammation and injury in a model of acute typhoid fever. J. Infect. Dis. **200:**1703–1713.
33. **Merritt, M. E., and J. R. Donaldson.** 2009. Effect of bile salts on the DNA and membrane integrity of enteric bacteria. J. Med. Microbiol. **58:**1533–1541.
34. **Premaratne, R. J., W. J. Lin, and E. A. Johnson.** 1991. Development of an improved chemically defined minimal medium for *Listeria monocytogenes*. Appl. Environ. Microbiol. **57:**3046–3048.
35. **Prouty, A. M., W. H. Schwesinger, and J. S. Gunn.** 2002. Biofilm formation and interaction with the surfaces of gallstones by *Salmonella* spp. Infect. Immun. **70:**2640–2649.
36. **Ridlon, J. M., D. J. Kang, and P. B. Hylemon.** 2006. Bile salt biotransformations by human intestinal bacteria. J. Lipid Res. **47:**241–259.
37. **Riedel, C. U., I. R. Monk, P. G. Casey, D. Morrissey, G. C. O'Sullivan, M. Tangney, C. Hill, and C. G. M. Gahan.** 2007. Improved luciferase tagging system for *Listeria monocytogenes* allows real-time monitoring in vivo and in vitro. Appl. Environ. Microbiol. **73:**3091–3094.
38. **Rossi, S. S., J. L. Converse, and A. F. Hofmann.** 1987. High-pressure liquid chromatographic analysis of conjugated bile acids in human bile: simultaneous resolution of sulfated and unsulfated lithocholyl amidates and the common conjugated bile acids. J. Lipid Res. **28:**589–595.
39. **Saier, M. H., Jr.** 2000. Families of transmembrane transporters selective for amino acids and their derivatives. Microbiology **146**(Pt. 8)**:**1775–1795.
40. **Sattar, I., A. Aziz, S. Rasul, Z. Mehmood, and A. Khan.** 2007. Frequency of infection in cholelithiasis. J. Coll. Physicians Surg. Pak. **17:**48–50.
41. **Schlech, W. F., III.** 2000. Foodborne listeriosis. Clin. Infect. Dis. **31:**770–775.
42. **Sleator, R. D., C. G. Gahan, and C. Hill.** 2001. Identification and disruption of the *proBA* locus in *Listeria monocytogenes*: role of proline biosynthesis in salt tolerance and murine infection. Appl. Environ. Microbiol. **67:**2571–2577.
43. **Sleator, R. D., D. Watson, C. Hill, and C. G. Gahan.** 2009. The interaction between *Listeria monocytogenes* and the host gastrointestinal tract. Microbiology **155:**2463–2475.
44. **Sleator, R. D., H. H. Wemekamp-Kamphuis, C. G. Gahan, T. Abee, and C. Hill.** 2005. A PrfA-regulated bile exclusion system (BilE) is a novel virulence factor in *Listeria monocytogenes*. Mol. Microbiol. **55:**1183–1195.
45. **Sleator, R. D., J. Wouters, C. G. Gahan, T. Abee, and C. Hill.** 2001. Analysis of the role of OpuC, an osmolyte transport system, in salt tolerance and virulence potential of *Listeria monocytogenes*. Appl. Environ. Microbiol. **67:**2692–2698.
46. **Taylor, C. M., M. Beresford, H. A. Epton, D. C. Sigee, G. Shama, P. W. Andrew, and I. S. Roberts.** 2002. *Listeria monocytogenes relA* and *hpt* mutants are impaired in surface-attached growth and virulence. J. Bacteriol. **184:**621–628.
47. **Verheul, A., A. Hagting, M. R. Amezaga, I. R. Booth, F. M. Rombouts, and T. Abee.** 1995. A di- and tripeptide transport system can supply *Listeria monocytogenes* Scott A with amino acids essential for growth. Appl. Environ. Microbiol. **61:**226–233.
48. **Watson, B., S. Meldrum, H. Riddle, R. Brown, and G. Sladen.** 1972. pH profile of gut as measured by radiotelemetry capsule. BMJ **2:**104.
49. **Watson, D., R. D. Sleator, P. G. Casey, C. Hill, and C. G. Gahan.** 2009. Specific osmolyte transporters mediate bile tolerance in *Listeria monocytogenes*. Infect. Immun. **77:**4895–4904.
50. **Wong, S., D. Street, S. I. Delgado, and K. C. Klontz.** 2000. Recalls of foods and cosmetics due to microbial contamination reported to the U.S. Food and Drug Administration. J. Food Prot. **63:**1113–1116.
51. **Woo, P. C., A. M. Fung, S. K. Lau, and K. Y. Yuen.** 2002. Identification by 16S rRNA gene sequencing of *Lactobacillus salivarius* bacteremic cholecystitis. J. Clin. Microbiol. **40:**265–267.
52. **Zempleni, J., G. M. Green, A. W. Spannagel, and D. M. Mock.** 1997. Biliary excretion of biotin and biotin metabolites is quantitatively minor in rats and pigs. J. Nutr. **127:**1496–1500.

Editor: J. L. Flynn